REV. NO		REV. HISTORY	LTR	ECO NO	DATE	APPR'L
DWG	PART					
00	00	INITIAL RELEASE	-	-	-	-

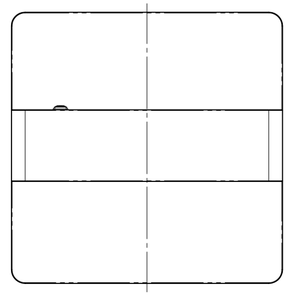

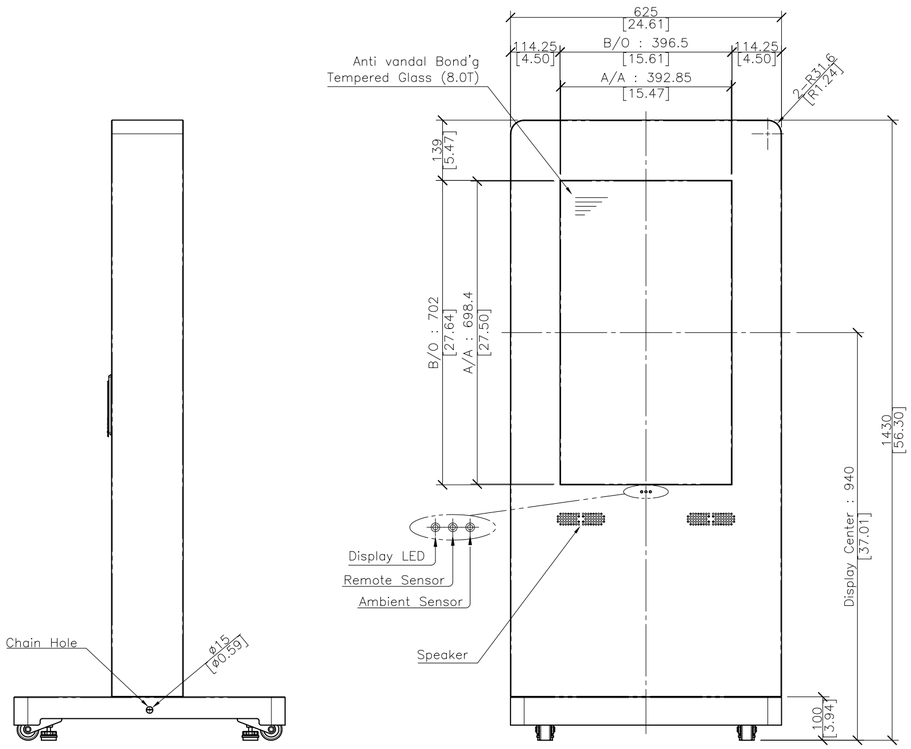

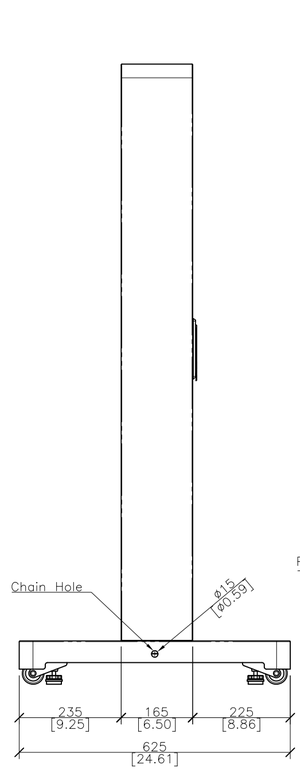

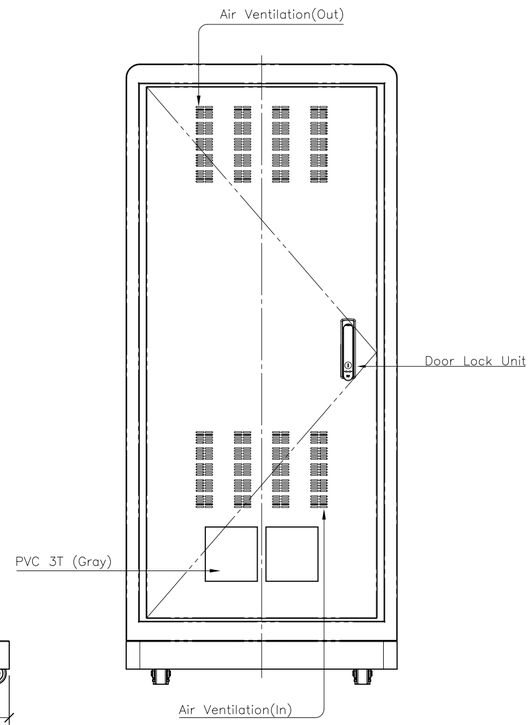

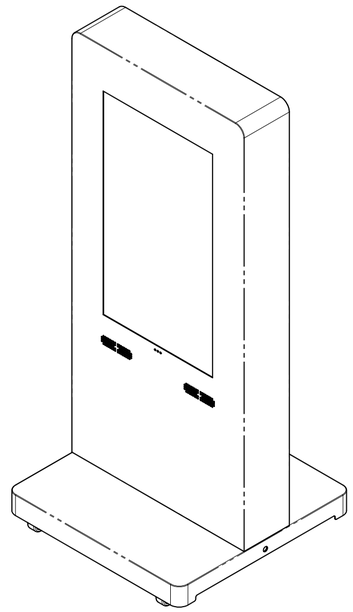

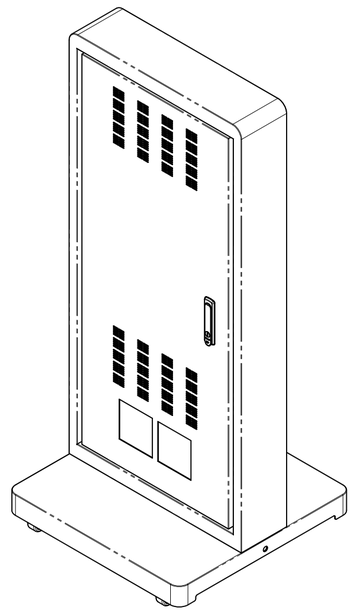

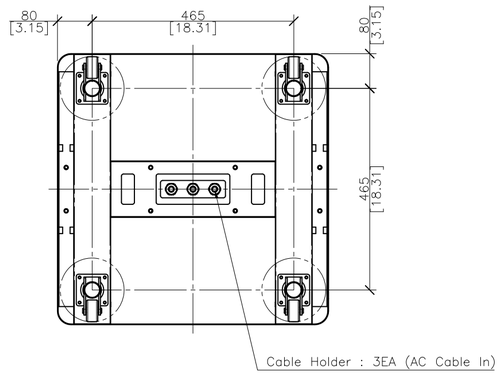

NOTES,

1. Cable Entry : Cable Gland("IP66" or more certified products should be used)

DRAWN	PLANNED	CHECKED	APPROVED	UNLESS OTHERWISE SPECIFIED ALL DIMENSION ARE IN MILLIMETERS	ANGLE. 3rd.	TITLE : H327SL(H323SL) EXTERIOR VIEW	UNIT : mm
S.W.SEO	S.H.JANG	S.H.JANG	Y.T.KIM	TOLERANCES ARE : LINEAR : X ± 0.20 .X ± 0.1 .XX ± 0.01 ANGLES : ± 0.1° RADII UNLESS NOTED : R 0.3	SCALE : 1/10		TYPE : ASSY
'25.04.23	'25.04.23	'25.04.23	'25.04.23				
HYUNDAI IT CO., LTD.			MODEL NAME (CODE): H327SL / H323SL	CUSTOMER. KYODOCOM	DWG REV : 01	DWG(PART) NO. H327SL(H323SL)_001	SIZE : A2
			FILE NAME : LAYOUT_H327SL_250423.DWG		SHT NO : 1/1		

This drawing is the property of HYUNDAI IT CO.,LTD. and should not be disclosed to any third party without prior permission of HYUNDAI IT CO.,LTD.

Sheet A2 Size (594mm X 420mm) , AutoCAD Text Style : Romans , Century Schoolbook / ProE text style : CG Centry Schbk